TECO

OUTLINE DIMENSIONS
3-PHASE INDUCTION MOTOR

FRAME NO :
D132

POLE	kW	HP	RPM	FRAME	L
2	5.5	7.5	2920	D132S1-2	436
2	7.5	10	2920	D132S2-2	436
4	5.5	7.5	1460	D132S-4	436
4	7.5	10	1460	D132M-4	474
6	3	4	960	D132S-6	436
6	4	5.5	960	D132M1-6	474
6	5.5	7.5	960	D132M2-6	474

Totally Enclosed Fan-Cooled Type. Squirrel-Cage Rotor.

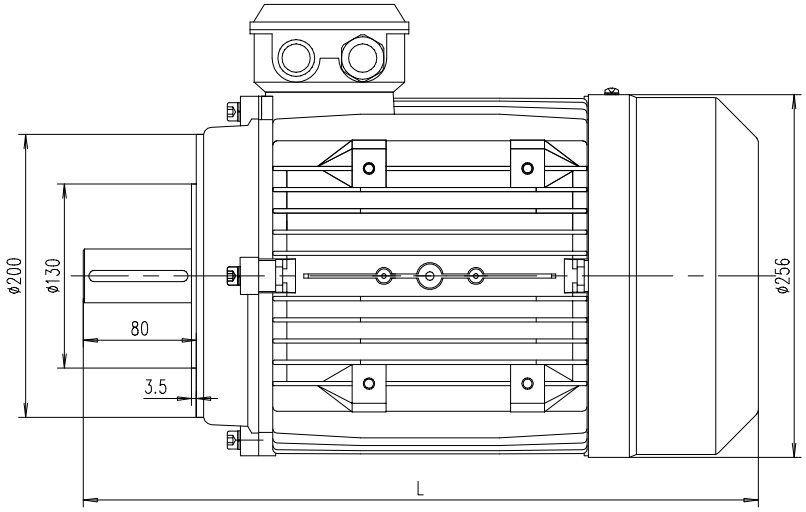

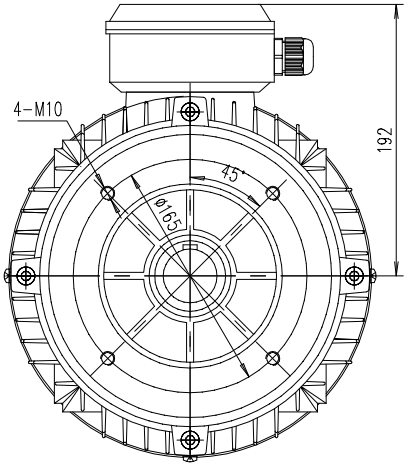

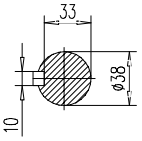

NOTES:
1. DIMENSIONS IN mm.
2. C-FLANGE MOUNTED IM3601.
3. FOR DIRECT DRIVE ONLY.
4. IP55 PROTECTION.

MAX ALLOY

DWN.	DP	16. 12. 24	REV : 00
CHKD.	AN	16. 12. 24	
APPD.	JC	16. 12. 24	